ADD61S
AHD SENSOR ECU
DIMENSIONS

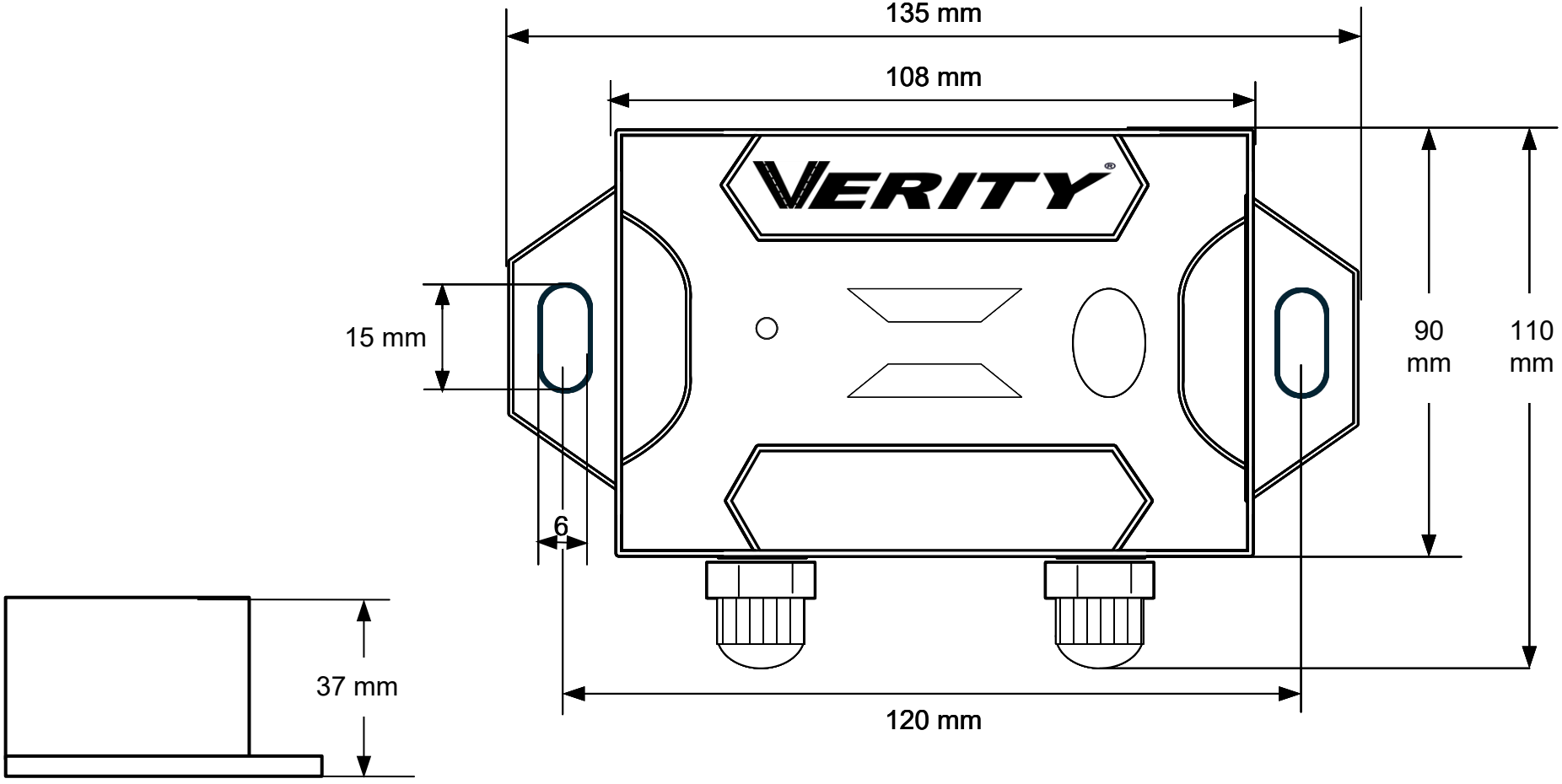

574-807-6004
www.veritysafe.com
All rights reserved.

NOTICE
Diagram is for reference purpose only
Subject to change without notice. Not to Scale

10/2026

ADD61S
AHD SENSOR ECU
DIMENSIONS